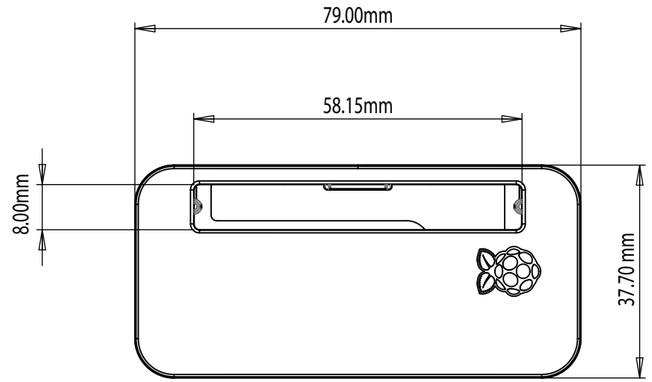
79.00mm
58.15mm
8.00mm
37.70 mm

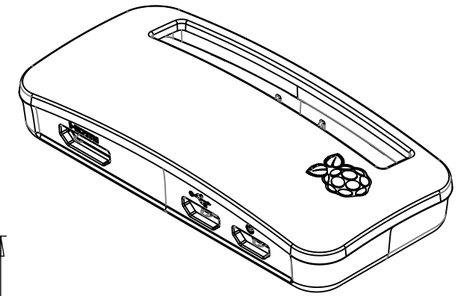

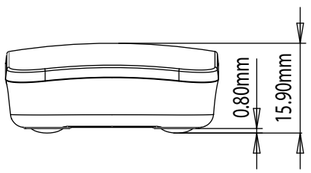
0.80mm
15.90mm

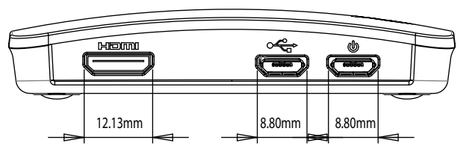
12.13mm
8.80mm
8.80mm

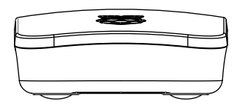

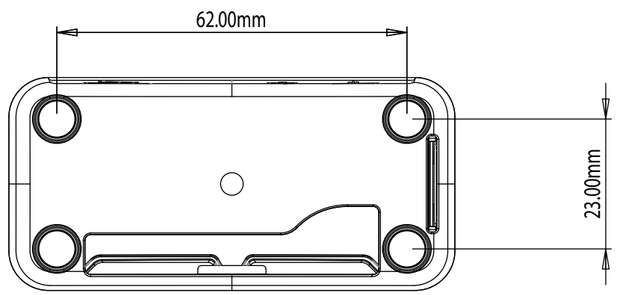
62.00mm
23.00mm